DTC	C0273/13	Open in ABS Motor Relay Circuit

DTC	C0274/14	Short to B+ in ABS Motor Relay Circuit

DTC	C1361/91	Short Circuit in ABS Motor Fail Safe Relay Circuit

DESCRIPTION

- The ABS motor relays consist of 2 relays and are included in the ABS R/B.
- The ABS MTR CUT relay is turned on after turning the ignition switch to the ON position. If the DTCs in the ABS pump motor circuit are memorized, the ABS MTR CUT relay cuts off the power supply to the ABS MTR relay and performs the fail safe.
- While any of the ABS, BA, TRAC and VSC is operating, the skid control ECU (included in the ABS and TRACTION actuator) turns the ABS MTR relay on to operate the actuator pump motor.
- If the voltage applied to the ABS motor relays (BM) drops below the condition that detects the DTCs due to the shortage of the battery or alternator output, the DTCs may be memorized.

DTC No.	DTC Detecting Condition	Trouble Area
C0273/13	When either of the following (a and b) is detected: (a) All the following conditions continue for at least 0.12 seconds. * IG1 voltage is between 9.5 and 17.2 V. * During initial check. * ABS, BA, TRAC, and VSC are in operation. * Relay contact is open when the relay is ON. (b) All the following conditions continue for at least 0.12 seconds. * IG1 voltage is less than 9.5 V. * Relay contact remains open when the relay is ON.	• ABS No. 2 fuse • ABS MTR relay • ABS MTR relay circuit • ABS R/B
C0274/14	The following condition continues for at least 4 seconds. – Relay contact is closed when the relay is OFF.	• ABS No. 2 fuse • ABS MTR relay • ABS MTR relay circuit • ABS R/B
C1361/91	All the following conditions continue for at least 4 seconds. – Immediately after turning IG switch to the ON position. – Relay contact is closed when ABS MTR CUT relay is OFF.	• ABS No. 2 fuse • ABS R/B • ABS MTR CUT relay • ABS MTR CUT relay circuit

cardiagn.com

WIRING DIAGRAM

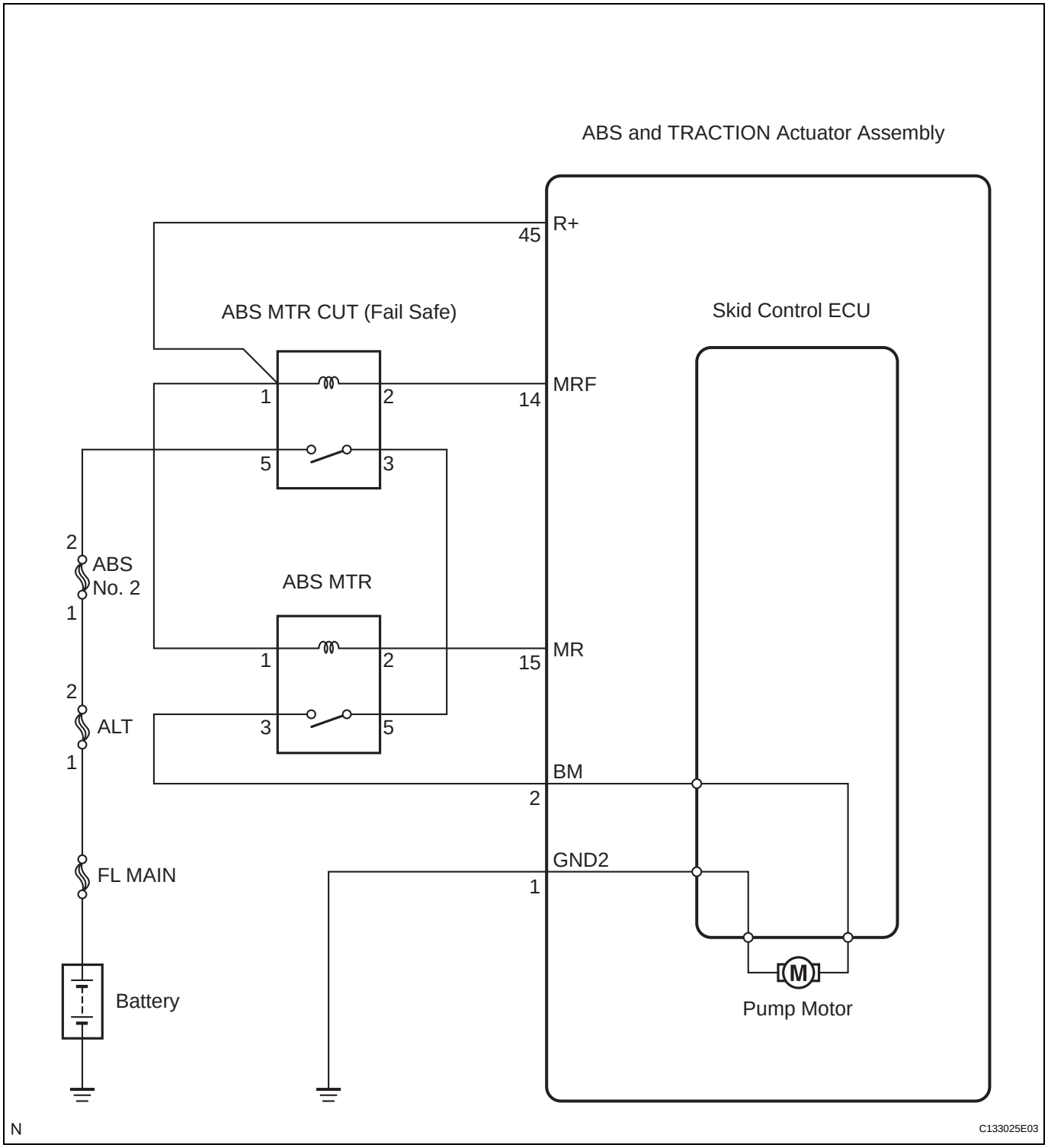

INSPECTION PROCEDURE

NOTICE:

When replacing the ABS and TRACTION actuator assembly, perform zero point calibration (See page BC-80).

1	PERFORM ACTIVE TEST BY INTELLIGENT TESTER (ABS MOTOR RELAY)

(a) Connect the intelligent tester to the DLC3.

cardiagn.com

(b) Start the engine.
(c) Select the ACTIVE TEST mode on the intelligent tester.
(d) Check the operation sound of the ABS motor individually when operating it with the intelligent tester.

Item	Vehicle Condition / Test Details	Diagnostic Note
ABS MOT RELAY	ABS motor relay / ON or OFF	Operation of motor (clicking sound) can be heard

OK:
The operation sound of the ABS motor should be heard.

NG → **Go to step 2**

OK

REPLACE ABS AND TRACTION ACTUATOR ASSEMBLY

2 INSPECT ABS NO. 2 FUSE

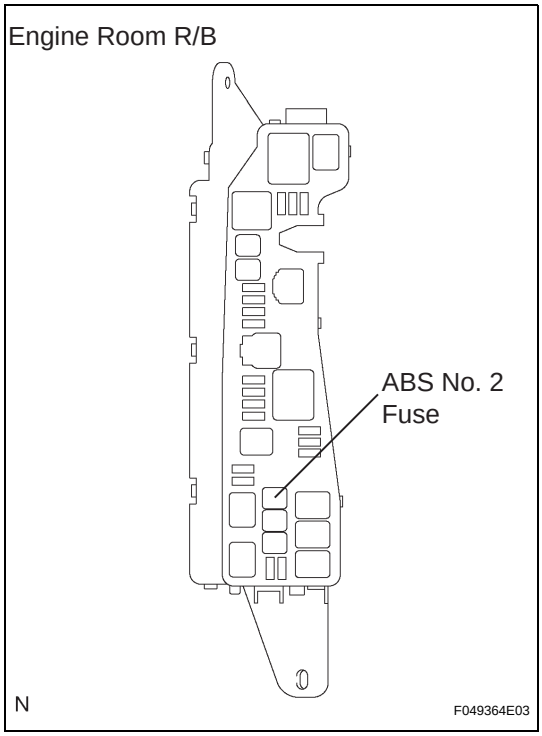

(a) Remove the ABS No. 2 fuse from the engine room R/B.
(b) Measure the resistance according to the value(s) in the table below.
Standard resistance

Tester Connection	Specified Condition
ABS No. 2 fuse	Below 1 Ω

NG → **REPLACE ABS NO. 2 FUSE**

OK

cardiagn.com

3 INSPECT ABS R/B (POWER SOURCE TERMINAL)

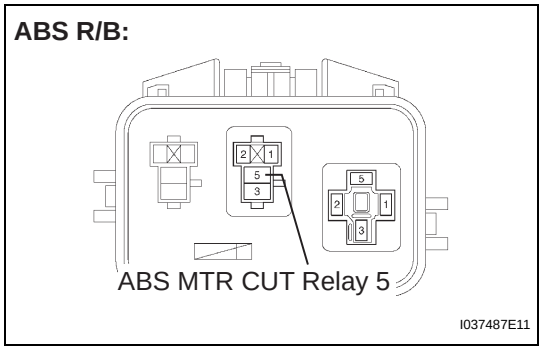

(a) Remove the ABS MTR CUT relay from the ABS R/B.
(b) Measure the voltage according to the value(s) in the table below.

Standard voltage

Tester Connection	Condition	Specified Condition
Terminal 5 - Body ground	Always	10 to 14 V

NG → **REPAIR OR REPLACE HARNESS OR CONNECTOR (POWER SOURCE CIRCUIT)**

OK

4 INSPECT ABS MTR CUT RELAY

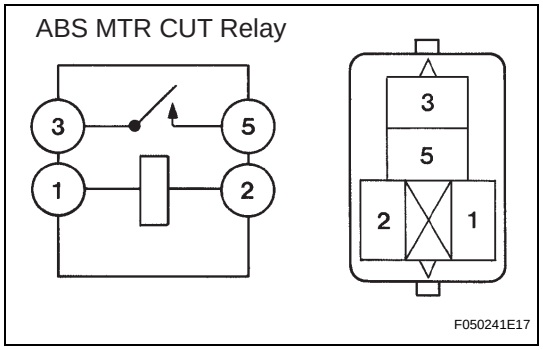

(a) Remove the ABS MTR CUT relay.
(b) Measure the resistance according to the value(s) in the table below.

Standard resistance

Tester Connection	Condition	Specified Condition
3 - 5	Always	10 kΩ or higher (No continuity)
3 - 5	Apply B+ between terminals 1 and 2	Below 1 Ω

NG → **REPLACE ABS MTR CUT RELAY**

OK

5 INSPECT ABS R/B

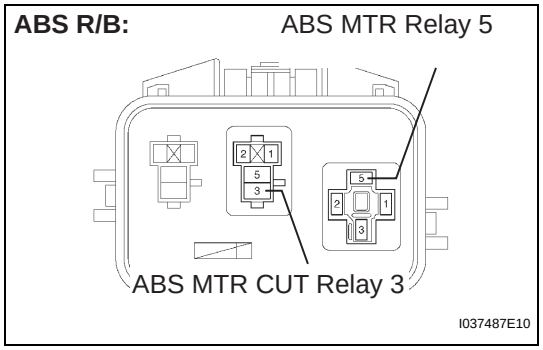

(a) Remove the ABS MTR relay and ABS MTR CUT relay from the ABS R/B.
(b) Measure the resistance according to the value(s) in the table below.

Standard resistance

Tester Connection	Specified Condition
5 (ABS MTR relay) - 3 (ABS MTR CUT relay)	Below 1 Ω

NG → **REPAIR OR REPLACE ABS R/B**

OK

cardiagn.com

6 INSPECT ABS MTR RELAY

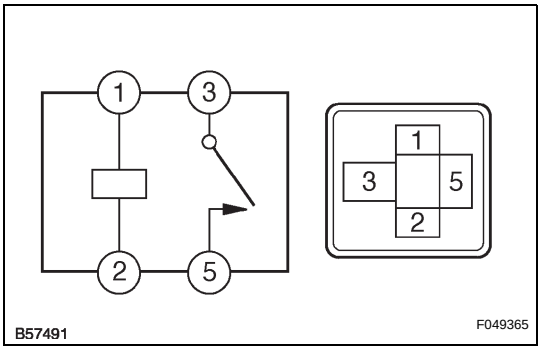

(a) Remove the ABS MTR relay.
(b) Measure the resistance according to the value(s) in the table below.
Standard resistance

Tester Connection	Condition	Specified Condition
3 - 5	Always	10 kΩ or higher (No continuity)
3 - 5	Apply B+ between terminals 1 and 2	Below 1 Ω

NG → **REPLACE ABS MTR RELAY**

OK

7 CHECK HARNESS AND CONNECTOR (ABS MTR RELAY - SKID CONTROL ECU)

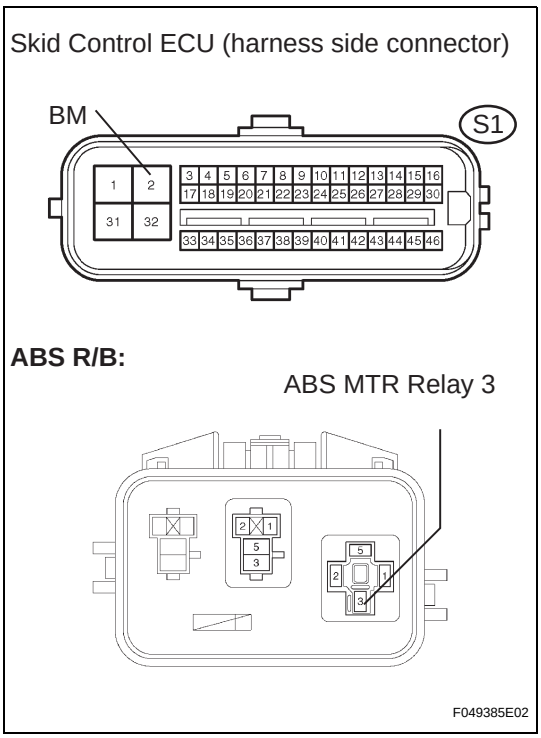

(a) Disconnect the skid control ECU connector and ABS MTR relay.
(b) Measure the resistance according to the value(s) in the table below.
Standard resistance

Tester Connection	Specified Condition
S1-2 (BM) - ABS MTR relay 3 (ABS R/B)	Below 1 Ω

(c) Measure the resistance according to the value(s) in the table below.
Standard resistance

Tester Connection	Specified Condition
S1-2 (BM) - Body ground	10 kΩ or higher

NG → **REPAIR OR REPLACE HARNESS OR CONNECTOR**

BC

OK

REPLACE ABS AND TRACTION ACTUATOR ASSEMBLY

cardiagn.com